Cable description

3ML / plug 400V 32A 3P-N-G / 3 x plugs 230V 32A P-N-G

- **Cable size**

On the 3 230V plugs side : 3 cables H07RNF 3G6² of 1 to 1,6 m long

On the 400V plug side : one cable H07RNF 5G6² of 2meter long

Total length of the assembled equipment : 3 meter

- **230V plug (3 blue plugs)**

3 x 230V 32A P-N-G plugs – Brandname Schneider

- **400V plus (1 red plug)**

400V 32A 3P-N-G plug – Brandname Schneider

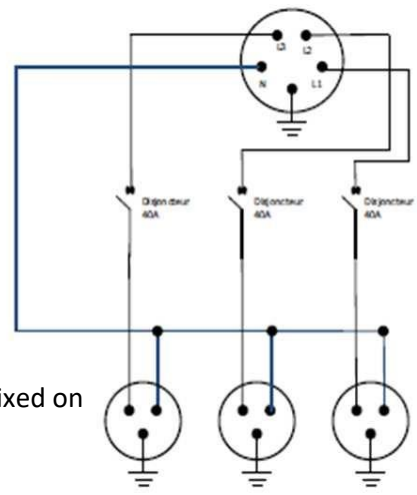

- **Distribution box**

Built up with 5 poles : Phase 1, Phase 2, Phase 3, Neutral, Ground

IP55 / Dimension (LxWxH) 225x175x100mm

Circuit breaker 4 P 40A A9N21030 Neutral terminal and Ground fixed on DIN rail

- **Assembling**

Made in France

Quality test done by the supplier and Rentaload to assure cabling compliance